Available online at www.sciencedirect.com

ScienceDirect

Energy Procedia 48 (2014) 813 – 818

Energy Procedia

SHC 2013, International Conference on Solar Heating and Cooling for Buildings and Industry
September 23-25, 2013, Freiburg, Germany

Life cycle impact assessment of a solar assisted heat pump for domestic hot water production and space heating

Sara Eicher[a], Catherine Hildbrand[a], Annelore Kleijer[a], Jacques Bony[a], Mircea Bunea[a], Stéphane Citherlet[a]

[a]*HEIG-VD, LESBAT, Av. des Sports 20, 1401 Yverdon-les-Bains, Switzerland*

Abstract

Solar heat pumps (SHP) are a class of heating systems combining solar thermal technology with heat pumps. In this article the life cycle impact assessment (LCIA) of a SHP system used to produce domestic hot water (DHW) and space heating (SH) for single family dwellings is presented. This study intends to evaluate the environmental impacts of the energy and material used in a serial SHP installation and identify areas for improvement by applying a "cradle-to-grave" approach when analysing the system. This includes the installation materials both in their manufacturing and disposal phases as well as the energy consumption for DHW and SH throughout a service life of 20 years. In addition, it provides a comparison against two other residential heating systems operating with the same life expectancy. In this LCIA, two environmental related indicators are used, one associated with depletion of non-renewable energy resources (CED_{NRE}) and the other with climate change (GWP). The impact of the type of electricity used was also investigated by defining, in addition to the European supply mix, an alternative supply mix with electricity deriving from renewable sources. This study shows that SHP have lower environmental impacts than systems operating on electricity only. Installations with large solar collector surfaces are also seen to lead to lower energy consumption related impacts. If the electricity used by these systems derives from renewable sources, the environmental performance improves. However, under these conditions, the SHP impact (material and energy consumption) related to climate change will be of the same order as that of the electric system due to a higher contribution of the infrastructure content of these systems.

Selection and peer review by the scientific conference committee of SHC 2013 under responsibility of PSE AG

Keywords: Life cycle impact assessment; Heat pump; Thermal solar collectors; Heating; Residential; GWP; CED_{NRE}

* Corresponding author. Tel.: +41 24 557 73 51
E-mail address: sara.eicher@heig-vd.ch

Selection and peer review by the scientific conference committee of SHC 2013 under responsibility of PSE AG
doi:10.1016/j.egypro.2014.02.094

1. Background

In Switzerland, SH and DHW are responsible for more than 40% of the total final energy consumption and CO_2 national emissions. Households represent about 65% of the heating demand [1]. In order to reduce building's heating requirements and come about with a sustainable geographic strategy for residential heating, the Swiss government is working on new energy policies that encourage the use of renewable energies, foster optimisation of building envelopes and promote solar thermal and heat pumps (HP) technologies.

The potential of coupling a HP with solar collectors for heating single family dwellings as already been demonstrated in a previous study [2]. However, their environmental impacts in terms of operational energy consumption and materials used have not been addressed to objectively compare different heating systems. More recently, a SHP research project [3], developed within the framework of Task 44/ Annex 38 (T44A38) of the International Energy Agency (IEA) [4], has defined, among other objectives, to evaluate the environmental impacts of a serial SHP system and to compare with those of different residential heating technologies. The work presented here is part of this investigation.

Nomenclature

CED	Cumulative energy demand
DHW	Domestic hot water
GWP	Global warming potential
HP	Heat pump
LCIA	Life cycle impact assessment
NRE	Non-renewable energy
SC	Solar collector
SH	Space heating
SHP	Solar heat pump

2. LCIA Methodology

This LCIA includes the installation materials both in their manufacturing and disposal phases as well as the energy use for DHW and SH throughout an operational period of 20 years. The methodology applied in this study was elaborated according to the ISO standards 14040 [5] and 14044 [6]. Data on material constituents of system components was determined from an industrial partner or based on experience. All impact values were taken from the Ecoinvent database v2.2 [7] that contains a large number of processes for production of goods and provision of services with a focus on European production chains. These include:

- Component materials (extraction, transportation, manufacturing and disposal)
- Existing facilities such as heat pumps (manufacturing and disposal)
- Energy carriers and requirements for system operation

All hydraulic components were also considered in this study (e.g. valves, circulators and expansion vessels).

2.1. System boundary

In this study the following life cycle stages are considered: extraction of raw materials, transport to the manufacturer site, components fabrication, assembly and disposal. The use phase is taken into account by

calculating the annual energy consumption of the chosen building over an assumed operating life of 20 years. Transport between the assembly site and the installation site is excluded from the analysis.

2.2. Functional unit

All systems investigated are used to produce DHW and SH for a building with a given heat load. Therefore, energy demand is the same for all configurations described. The function against which the different residential heating technologies will be compared is "to meet the building energy demand for DHW production and SH over an operating period of 20 years".

2.3. Indicators

The LCIA of a product or process can be characterised with a variety of indicators. In this study, two environmental related indicators were selected, as they were found pertinent to heating technologies by the T44A38 participants:

- CED_{NRE} - Cumulative Energy Demand, non-renewable: accounting for the primary energy from fossil, nuclear and primary forest resources (i.e. original forests that are destroyed and replaced by farmland) defined in terms of kWh.
- GWP - Global Warming Potential: accounting for all greenhouse gas emissions, expressed in kg CO_2 -eq.

2.4. Energy consumption

Energy consumption for DHW and SH was defined based on monthly simulations of the building that subsequently led to annual final energy consumptions for each configuration. This energy is assumed to be generated by the European electricity supply mix on low voltage (ENTSO-E[1]) that takes into account the European composition of the electricity at the plug [8].

To illustrate the replacement of current electricity generation with renewable energy, a second supply mix is also considered where electricity is produced by different types of PV systems in Switzerland. It includes electrical energy used to manufacture the PV panels but excludes grid distribution [8].

2.5. Assumptions and limitations

For the end-of-life phase, waste processing of all materials has been assigned to one of the following methods of disposal: landfill, incineration and recycling. In this study only the environmental impacts related to landfill and incineration are taken into account. Recycling impacts will be assigned to the fabrication phase of the product using the recycled material.

For existing facilities in the Ecoinvent database (e.g. HP, tanks and solar collectors), the resultant impact value has been dissociated in their manufacturing and elimination parts for adequate account of their individual contribution.

Some materials of small mass content (when compared to the total mass of the installation) have not been included e.g. piping insulation materials. The SH distribution system is also excluded from this study as it is assumed to be identical for each configuration.

---

[1] European Network of Transmission System Operators for Electricity

3. Installations considered

Three heating installations differing in their system of DHW production have been considered. For all configurations, the T44A38 reference building SFH15 was adopted [9] and the same SH production system was chosen: 4 kW ground-water HP with a 75 m borehole heat exchanger.

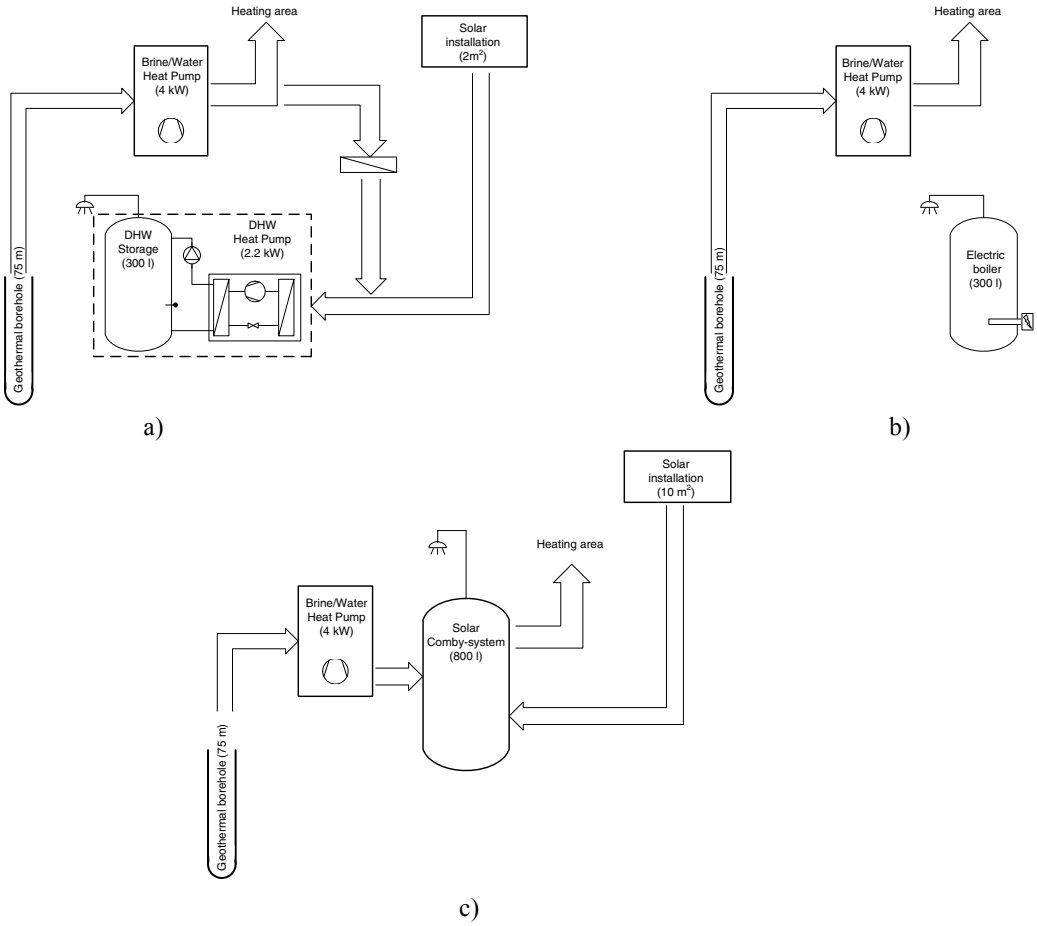

Fig 1. Schematic representation of the three installations: a) reference: HP + serial SHP; b) HP + electric boiler; c) solar combi-system.

The first configuration, which serves as a reference throughout this study, is a brine-water HP coupled to 2 m^2 of solar collectors for DHW production. In cases where solar energy is not enough, this SHP has been designed to extract energy from the heating circuit of the building. According to the classification scheme proposed by T44A38, this system is a serial SHP [10]. A simplified representation of the reference system is presented in Fig. 1a). The second configuration consists of a conventional electric boiler system for DHW preparation, see Fig. 1b). Finally, a conventional combi-system coupled to 10 m^2 of solar collectors for both DHW preparation and SH was chosen, see Fig. 1c). According to the classification scheme proposed by T44A38, this system falls in the category of parallel SHP [10].

4. Results and discussion

Fig. 2 shows the environmental impacts associated with each configuration based on the ENTSO-E electricity mix. These are divided into impacts due to infrastructure components and impacts for the operational energy consumption over the entire life cycle span.

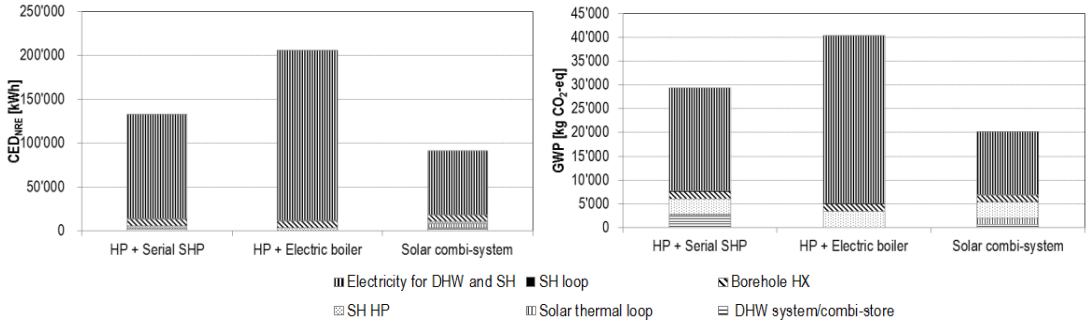

Fig. 2. Comparison of CED_{NRE} and GWP impacts between different configurations, mix ENTSO-E.

It can be seen that, for all configurations, impacts due to operational energy use predominate over the entire life cycle period and can be responsible for up to 75% of the total impact. The electric boiler which relies on electricity only, is seen to perform worst for both environmental impact categories. However, their infrastructure impacts are the lowest, mainly because of the small number of components in comparison with the two other configurations that include solar installations.

Results also demonstrate that the solar combi-system has better performance than the reference case. By having a larger solar installation, the impacts related to energy use decrease because of the larger contribution of solar thermal energy to DHW production and SH. But on the other hand, the share of impacts due to the system infrastructure increases.

Infrastructure impacts of the borehole heat exchanger are relatively important with drilling alone representing up to 50% of the total impact of this component. For GWP and for all configurations, the infrastructure impacts related to the SH system dominate. This is mainly due to the refrigerant used in the HP that can represent up to 85% of the total HP impacts. Compared to the solar combi-system, the reference configuration has approximately the same embodied emissions despite of having a smaller solar installation. This difference is partially compensated by the impacts of the serial SHP, particularly those of its refrigerant.

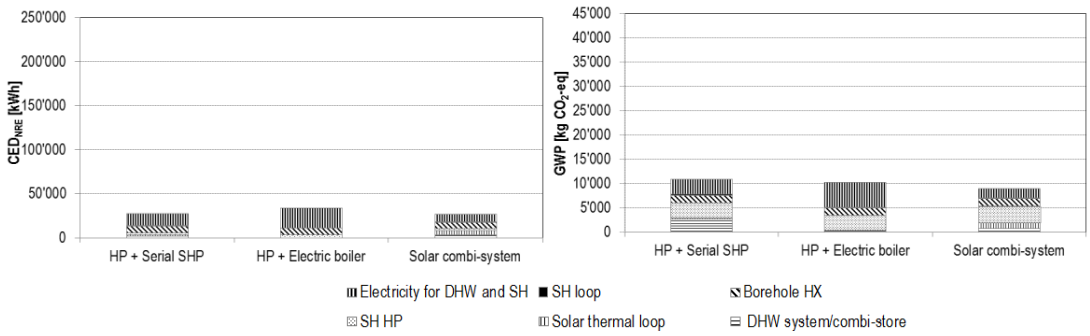

Fig. 3. Comparison of CED_{NRE} and GWP impacts between different configurations, mix of PV technologies

In order to determine the effect of replacing current electricity generation with renewable sources for decreasing environmental impacts, the electrical energy supply for all configurations was replaced with that generated by a mix of PV technologies.

As expected, Fig. 3 shows that renewable generated electricity could drastically reduce the impacts associated with energy consumption. Discrepancies in the overall impacts are also less pronounced between configurations. In this scenario, material related impacts take a leading position and can no longer be neglected when improving the environmental profile of residential heating systems. This suggests that improvements on developing residential heating systems should not only concentrate on the traditional aspects such as system efficiency and energy management strategies but also on the material content, by employing less material and with less negative impacts.

5. Conclusions

The life cycle impact assessment of a SHP used to produce DHW and SH for single family dwellings was performed and a comparison was made against two other residential heating technologies. This study indicates that depending on the type of SHP system, the environmental impact due to materials is not negligible when compared to the operational energy use. In fact, infrastructure related impacts become dominant if electricity derives from renewable sources such as PV. Moreover, substituting common generated electricity with renewable sources can result up to about 80% reduction of the total impact. Thus to improve the environmental performance of the SHP technology it is not only necessary to improve the SHP system efficiency and the electricity supply mix, but also to reduce the quantity and improve the type of materials used.

Acknowledgements

The authors would like to thank the Swiss Federal Office of Energy for the financial support of this project as well as the participants of T44A38 of the IEA.

References

[1] Services cantonaux de l'énergie et de l'environnement – www.energie-environnement.ch/brochure-chauffage (June, 2013).
[2] Citherlet S, Bony J, Nguyen B. SOL-PAC: Analyse des performances du couplage d'une pompe à chaleur avec une installation solaire thermique pour la rénovation. Final report. OFEN publication 280116. Switzerland; 2008.
[3] Eicher S, Hildbrand C, Bony J, Bunea M, Hadorn J-C, Citherlet S. Solar assisted heat pump for domestic hot water production., Energy Procedia 2012; 30: 571-579.
[4] Task 44 : http://task44.iea-shc.org (June, 2013).
[5] ISO 14040:2006, Environmental management – Life cycle assessment – Principles and framework.
[6] ISO 14044:2006, Environmental management – Life cycle assessment – Requirements and guidelines.
[7] Ecoinvent v2.2. Swiss Center for Life Cycle Inventories; 2010. Dübendorf.
[8] Itten R, Frischknecht R, Stucki M. Life Cycle Inventories of Electricity Mixes and Grid, ESU-service (PSI); 2012.
[9] Dott R, Haller M, Ruschenburg J, Ochs F, Bony J. The reference framework for system simulations of the IEA SHC Task 44 / HPP Annex 38, Part B: Buildings and Space Heat Load Database. Final report T44A38 Subtask A; 2012.
[10] Ruchenburg J and Herkel S. A review of market available solar thermal heat pump systemsTechnical report T44A38 Subtask A; 2013.